Shandong Kaiqiang Electric Technology Co., Ltd

KD Seamless Conductor Bar System
(35A 50A 80A 100A 125A 150A 175A)

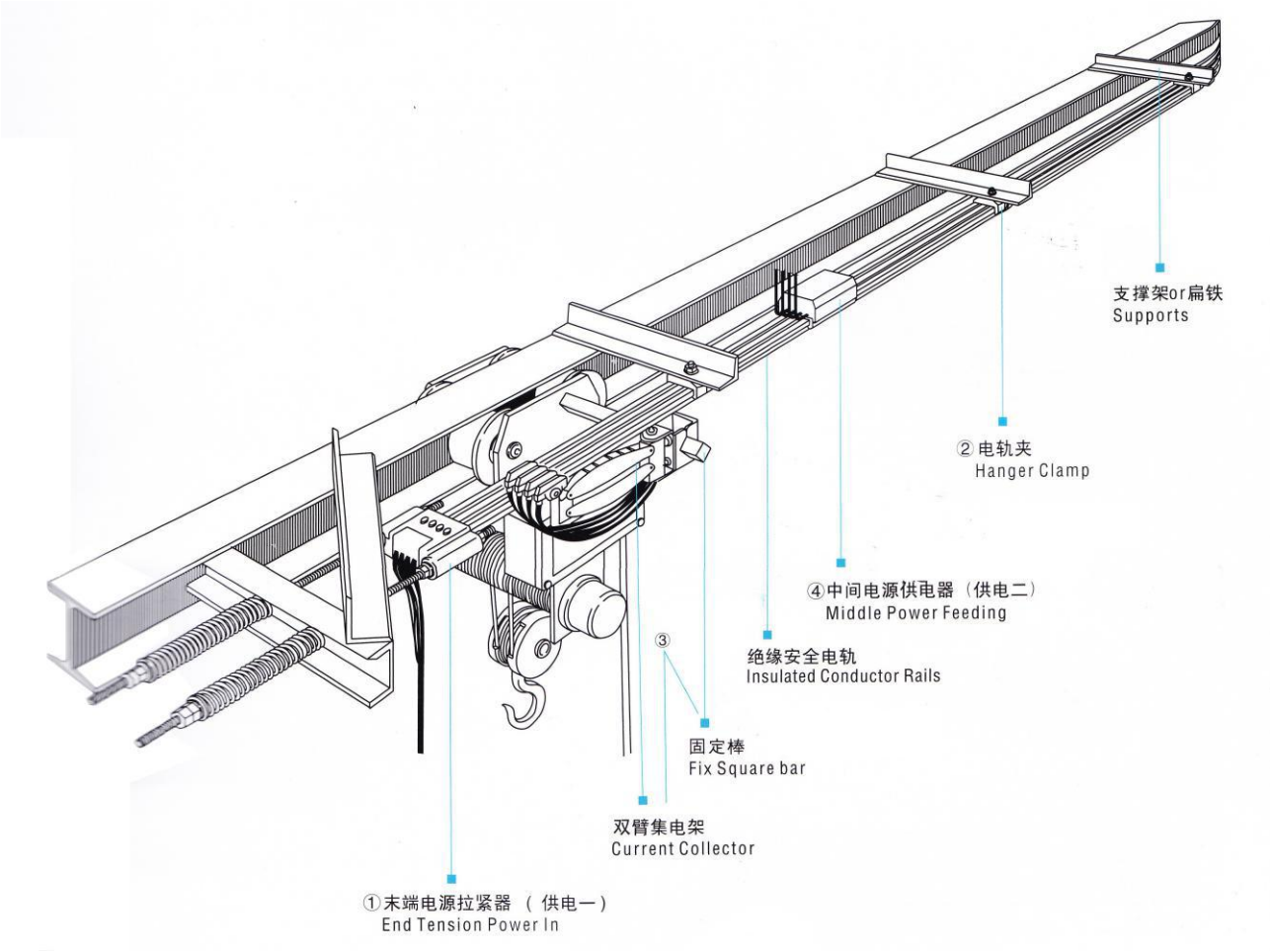

Catalogue

Catalogue

General....1

Advantage....1

Assemblies....2

Conductor bar....2

Hanger clamp....4

End tension& power in....4

Enhanced end power puller....5

Current collector....5

Collector....6

Middle power feeding....6

Fix square bar....7

Electric rail bracket....7

Clean scrubbing piece....8

Calculation....8

Contacts....10

Seamless conductor bar system

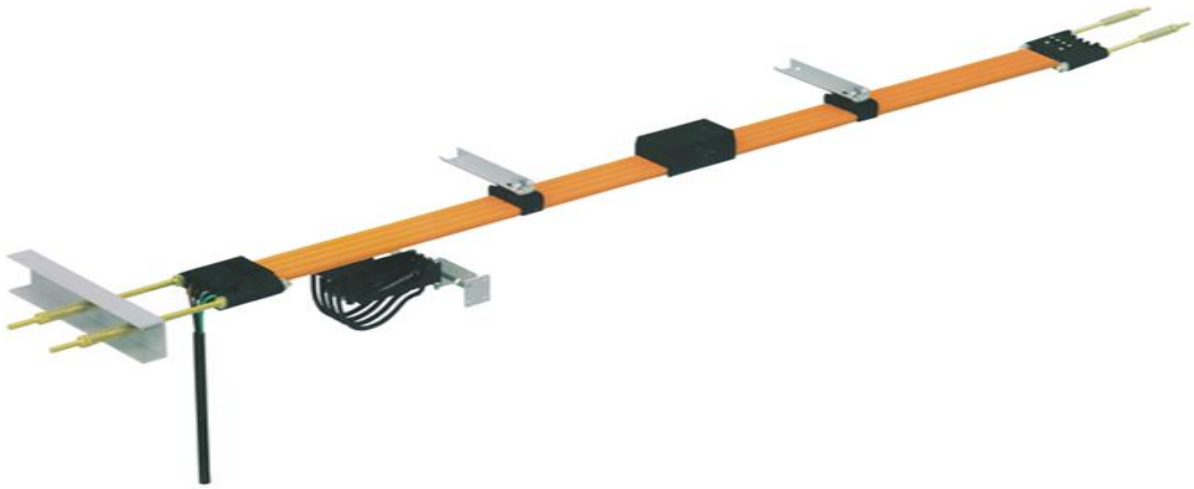

General

The safety power rails are electrical conductors of various profiles that are used to provide electrical potential to moving systems along a path of travel which have 3-6 poles.

The safety power rails are available for current load from 30A up to 200A mobile electrification technology for moving transportation vehicles and equipment. Common application include:manufacturing robots,material handing system,cranes …..

Safety power rail systems are available in a variety of configuration depending on applications requirements.
Safety power rails (3 IN 1, 4 IN 1, 6 IN 1)

Advantage

1. No joints (except power feed), safety, and neat，use indoor.
2. Integrated design, compact, easy to installation and maintenance, save time and reduce cost
3. Continuously copper inside, conductivity up to 99.99%, small voltage drop, travel steadily, and allow high travel speed, less noise.
4. Housing made of PVC, and special technology makes it anti-shock, ultraviolet protected and good physical characteristics.
5. Install radius down to 500mm, widely application.
6. Ambient temperature: PVC -15℃—+55℃

We can do the busbar according customer request.All copper will be oxygen-free copper.

Assemblies

➢ Conductor bar

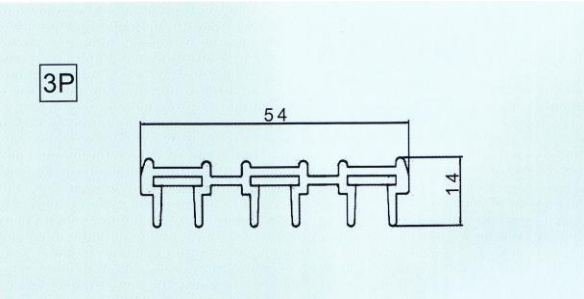

3P-Continuous Insulated Conductor Rails					
Type	Specification	Copper weight (g/m)	Copper thickness(mm)	Copper width (mm)	No.
KD-3-5-25A	3P4.85 ㎟	129.51	0.50	9.70	73050025
KD-3-6-30A	3P6.30 ㎟	168.33	0.65	9.70	73060030
KD-3-11-55A	3P11.64 ㎟	310.8	1.20	9.70	73110055
KD-3-13-60A	3P13.58 ㎟	362.58	1.40	9.70	73130060
KD-3-15-75A	3P15.52 ㎟	414.39	1.60	9.70	73150075
KD-3-21-105A	3P21.83 ㎟	582.72	2.25	9.70	73210105
KD-3-28-140A	3P28.13 ㎟	751.08	2.90	9.70	73280140
KD-3-32-160A	3P32.01 ㎟	854.67	3.30	9.70	73320160
KD-3-45-225A	3P45.60 ㎟	1217.52	2.40	19.00	73450225

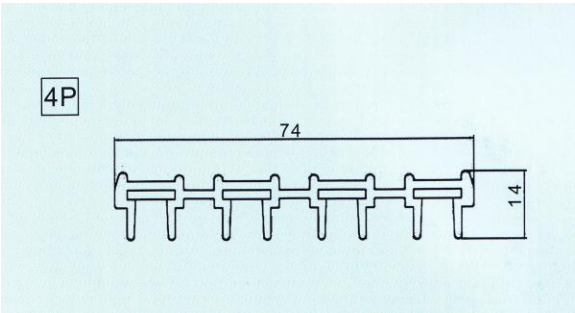

4P-Continuous Insulated Conductor Rails					
Type	Specification	Copper weight (g/m)	Copper thickness(mm)	Copper width (mm)	No.
KD-4-5-25A	4P4.85 ㎟	172.68	0.50	9.70	74050025
KD-4-6-30A	4P6.30 ㎟	224.44	0.65	9.70	74060030
KD-4-8-40A	4P8.82 ㎟	314.00	0.90	9.80	74060040
KD-4-11-55A	4P11.64 ㎟	414.4	1.20	9.70	74110055
KD-4-13-60A	4P13.58 ㎟	483.44	1.40	9.70	74130060
KD-4-15-75A	4P15.52 ㎟	552.52	1.60	9.70	74150075
KD-4-21-105A	4P21.83 ㎟	776.96	2.25	9.70	74210105
KD-4-28-140A	4P28.13 ㎟	1001.44	2.90	9.70	74280140
KD-4-32-160A	4P32.01 ㎟	1139.56	3.30	9.70	74320160

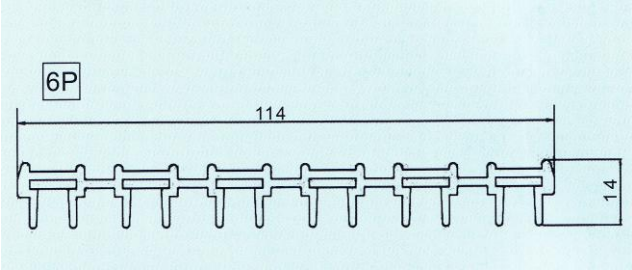

6P-Continuous Insulated Conductor Rails					
Type	Specification	Copper weight (g/m)	Copper thickness(mm)	Copper width (mm)	No.
KD-6-6-30A	6P6.30 ㎟	336.66	0.65	9.70	76050030
KD-6-11-55A	6P11.64 ㎟	621.60	1.20	9.70	76060055
KD-6-15-75A	6P15.52 ㎟	828.78	1.60	9.70	76060075

➢ Hanger clamp

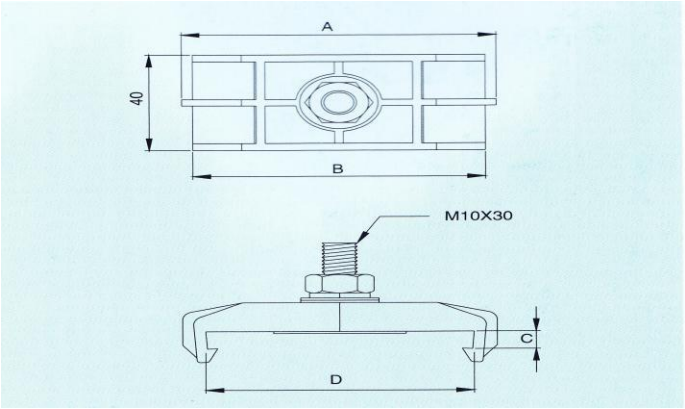

Hanger Clamp							
Type	Specification	Weight（kg）	A	B	C	D	No.
KD-801	3P	0.065	69	63	8.3	56	70300801
KD-802	4P	0.071	88	82	8.3	76	70400802
KD-803	6P	0.082	129	124	8.3	116	70600803

➢ End tension& power in

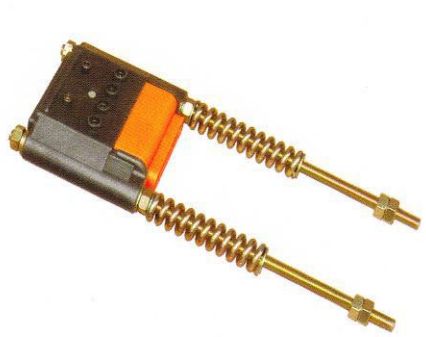

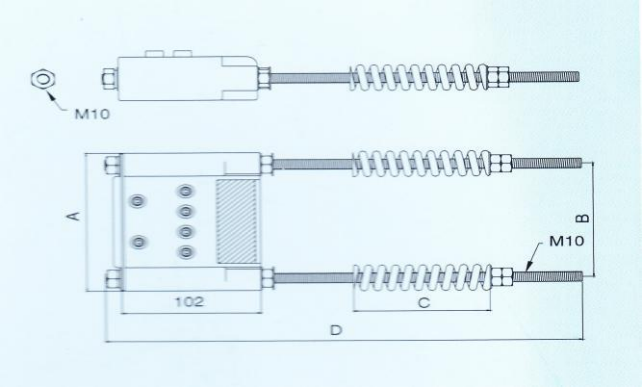

End Tension & Power In							
Type	Specification	Weight（kg)	A	B	C	D	No.
KD-701	3P	1.24	115	89	100	400	70300701
KD-702	4P	1.31	134	109	100	400	70400702
KD-703	6P	1.34	180	151	60	300	70600703

➢ Enhanced end power puller

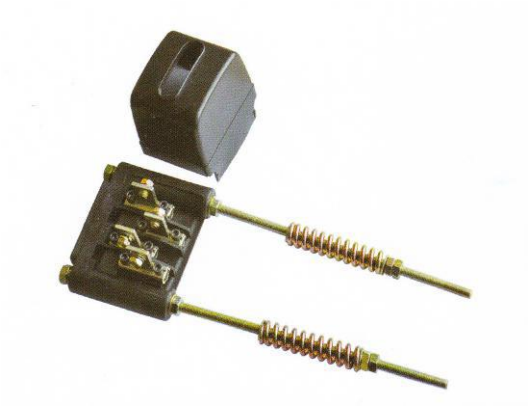

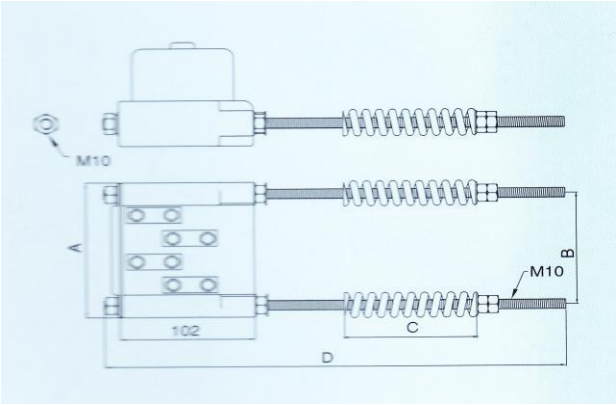

Enhanced End Power Puller							
Type	Specification	Weight（kg)	A	B	C	D	No.
KD-501	4P	1.48/pcs	141	110	100	400	70400501

➢ Current collector

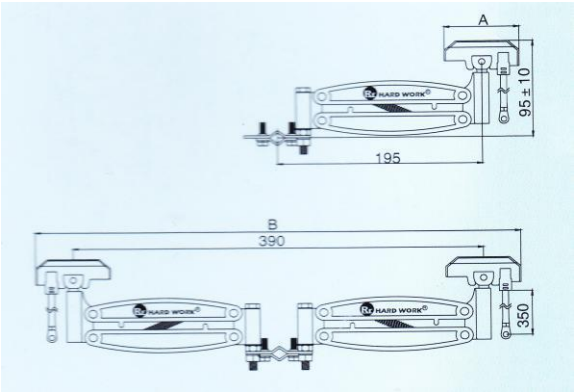

Current Collector					
Type	Specification	Weight（kg)	A	B	No.
KD-901	3P/30Amp	0.73	67	517	70330901
KD-902	3P/60Amp	0.79	82	540	70360902
KD-903	3P/100Amp	1.21	118	560	70310903
KD-904	4P/30Amp	0.96	67	517	70430904
KD-905	4P/60Amp	1.09	82	540	70460905
KD-906	4P/100Amp	1.6	118	560	70410906
KD-907	6P/30Amp	1.16	67	517	70630907
KD-908	6P/60Amp	1.29	82	540	70660907
KD-909	6P/100Amp	1.8	118	560	70610909

➢ Collector

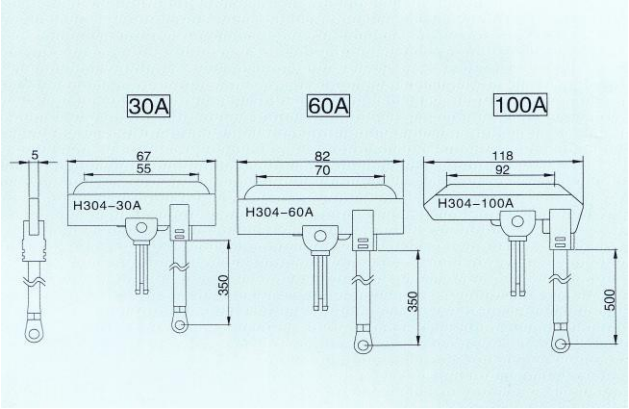

Collector			
Type	Specification	Weight（kg)	No.
KD-503	30Amp	0.065	70300503
KD-504	60Amp	0.095	70600504
KD-505	100Amp	0.22	70100505

➢ Middle power feeding

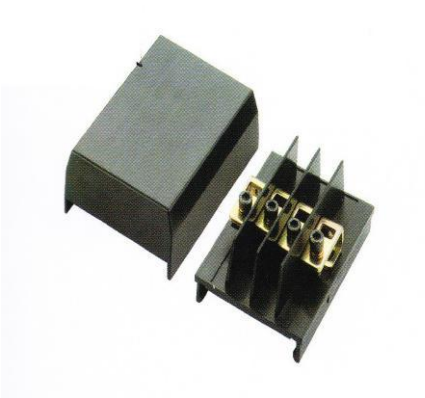

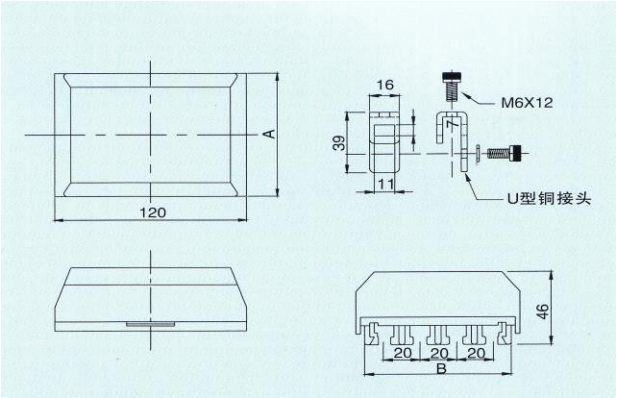

Middle Power Feeding					
Type	Specification	Weight（kg)	A	B	No.
KD-506	3P	0.2	69	60	70300506
KD-507	4P	0.26	90	81	70400507
KD-508	6P	0.4	120	122	70600508

➢ Fix square bar

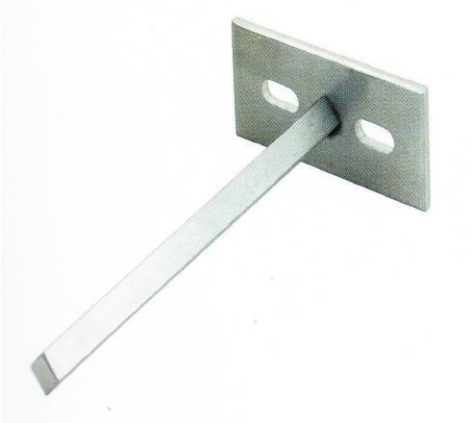

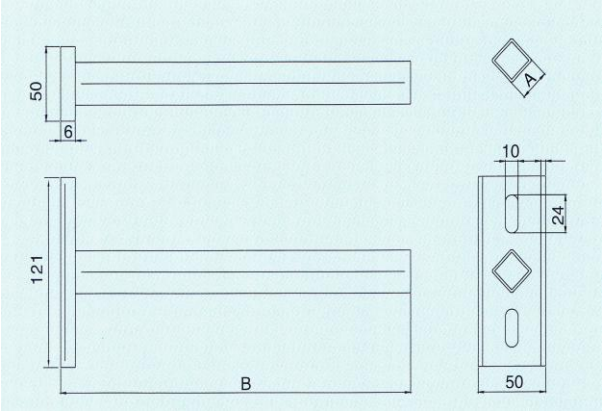

Fix Square Bar				
Type	Weight（kg)	A	B	No.
KD-704	0.54	12.6	230	70000704
KD-705	0.67	12.6	330	70000705

➢ Electric rail bracket

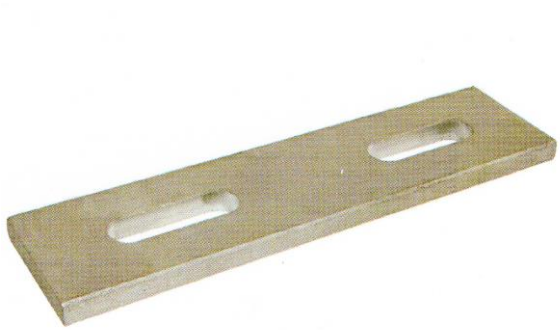

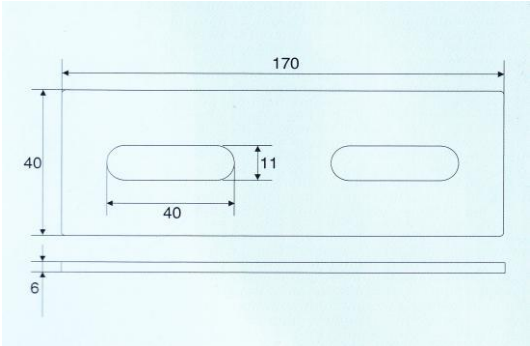

Electric rail bracket			
Type	Specification	Weight（kg)	No.
KD-706	3P,4P	0.28	70340706

➢ Clean scrubbing piece

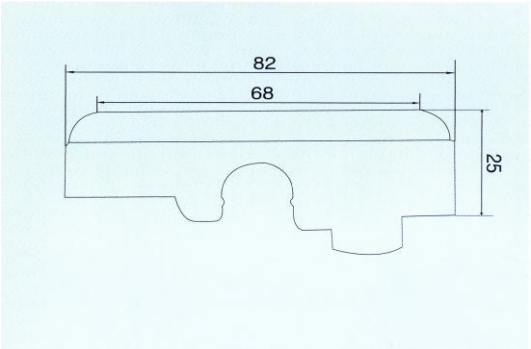

Clear scrubbing piece			
Type	Specification	Weight（kg)	No.
KD-707	80Φ	0.022	70800707
KD-708	120Φ		70120708

Calculation

Please offer these information if you need our products.

Company Name:_____Contact _____
Project: _____Address: _____
E-mail: _____Project: _____
Telephone: _____Fax: _____
Date:_____

---

1. Type of crane/machine to be electrified:_____
2. Voltage: _____Volts ~/=: _____ Phases: c/s:_____
3. Length of conductor system:_____
4. Number of conductors required: _____power lines: _____control lines: ____neutral (ground):_____
5. Indoor: _____Outdoor:_____
6. Special site conditions (humidity, dust, chemical influence etc.):_____
7. Temperature conditions: _____°C min., _____°C max.
8. Type of conductors preferably wanted:_____
9. Number and position of feeder points:_____
10. Mounting position envisaged:_____
(prints and sketches should be submitted whenever obtainable)
11. Number of cranes / machines fed from the one system:_____
12. Ampere load of each crane / machine:_____
13. Other pertinent data:_____

_____

For curved tracks, breaks in system etc. please submit prints and sketches.

Motor (please mark run simultaneously and at the same time start the motor)	Crane 1						
	P/(KW)	Rated current			Starting current		
		A	$COS\varphi^N$	%ED	A	$COS\varphi^A$	Start Method
Main Hoisting							
Aux. Hoisting							
Main Traverse							
Aux. Traverse							
Main Travel							
Aux. Travel							
Slewing							
Luffing and any other Service							
The type of motor ： K:Squirrel-cage motors； S:Slip-ring motors； F:Inverter motor							

Motor (please mark run simultaneously and at the same time start the motor)	Crane 2						
	P/(KW)	Rated current			Starting current		
		A	$COS\varphi^N$	%ED	A	$COS\varphi^A$	Start Method
Main Hoisting							
Aux. Hoisting							
Main Traverse							
Aux. Traverse							
Main Travel							
Aux. Travel							
Slewing							
Luffing and any other Service							
The type of motor ： K:Squirrel-cage motors； S:Slip-ring motors； F:Inverter motor							

Contacts

Shandong Kaiqiang Electric Technology Co.,Ltd.

ADD: No. 6000 NORTH RING ROAD, LINQU, WEIFANG, SHANDONG, CHINA

Baoding Zhongze I/E Co.,Ltd. (Exclusive sales)

ADD: ROOM 206, INNOVATION CENTER BUILDING, NO.3188, NORTH HENGXIANG STREET, BAODING , HEBEI , CHINA

Tel：0086-186-0332-3110

Fax：0086-312-315-2365

Website: en.klifting.com

For further information of KD Seamless conductor bar, please contact us in the above ways.

We commit ourselves to constant improvement of our design and processing of the products.

We keep the right of perfecting the instruction book and the product design to achieve the goal.

It's important to select the suit Safe Conductor Bar for each application. Otherwise it will cause serious consequences , such as property damage or personal injury.